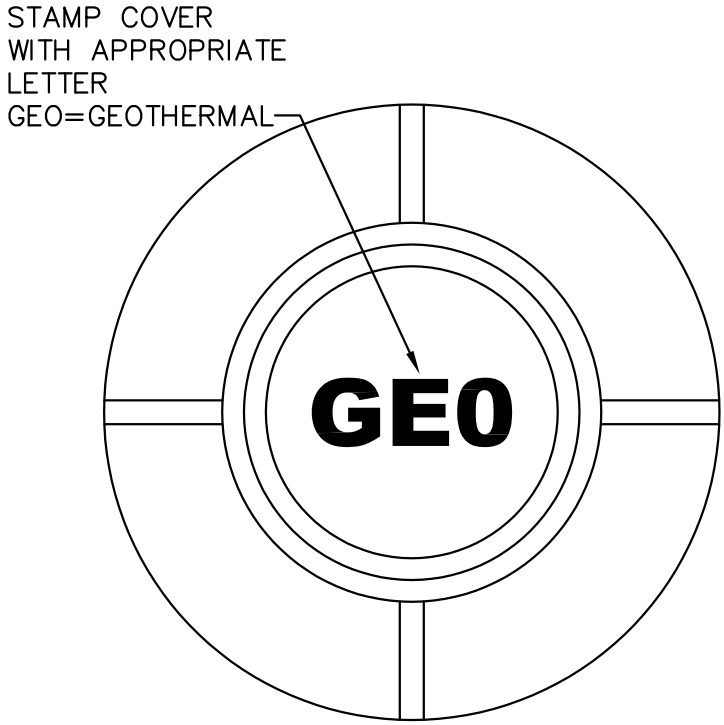

PLAN

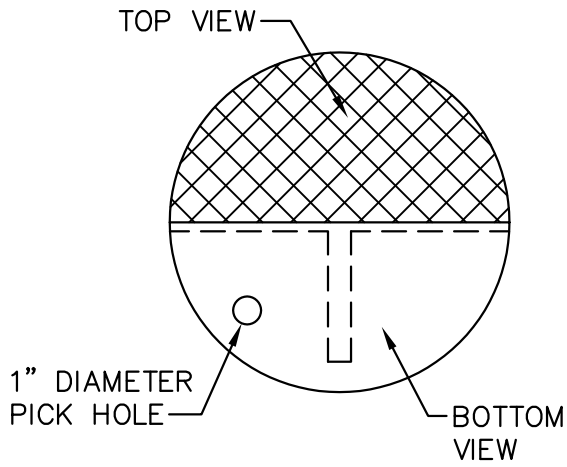

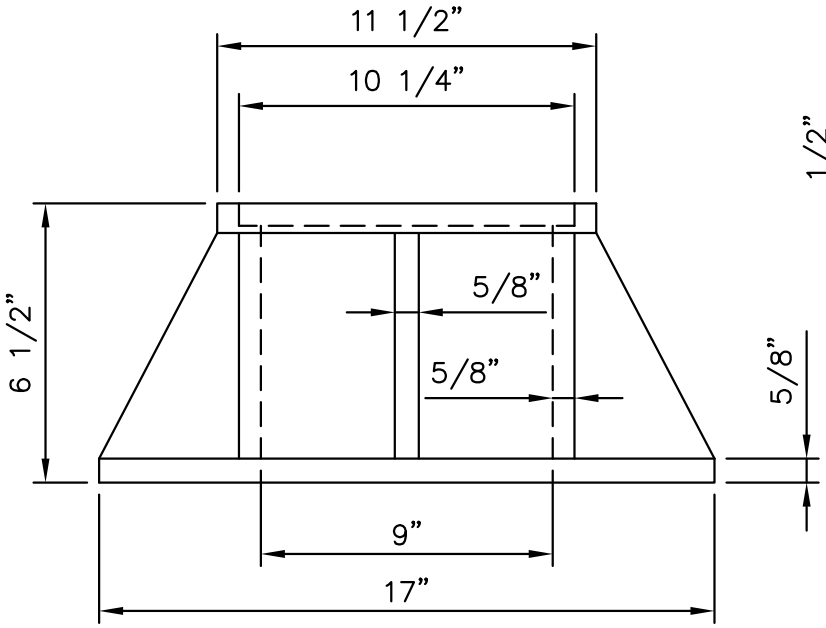

ELEVATION

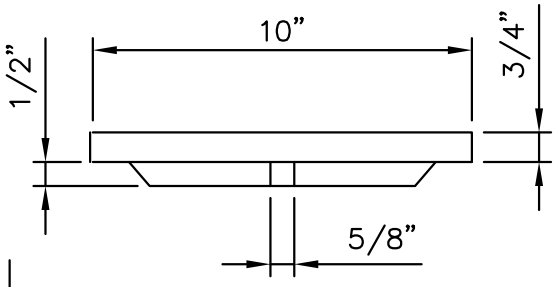

COVER

NOTES:

1. MATERIAL: CAST IRON, ASTM A-48, CL. 30
2. TRAFFIC RATING: H20

CITY OF KLAMATH FALLS

MK	Date	Revision:
1	6/04	2nd EDITION

GEOTHERMAL
FRAME AND COVER

Approved By: *Mike Kuenzi*

Drwn. By: WEM

Date: 2/2004

Drwg. No.: **6-100**

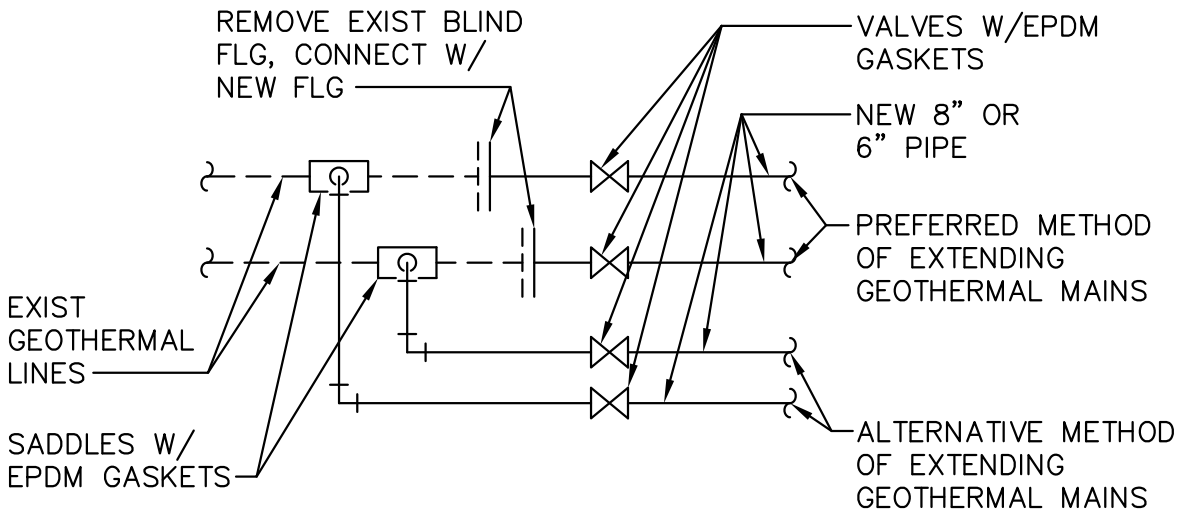

END–OF–LINE EXTENSIONS

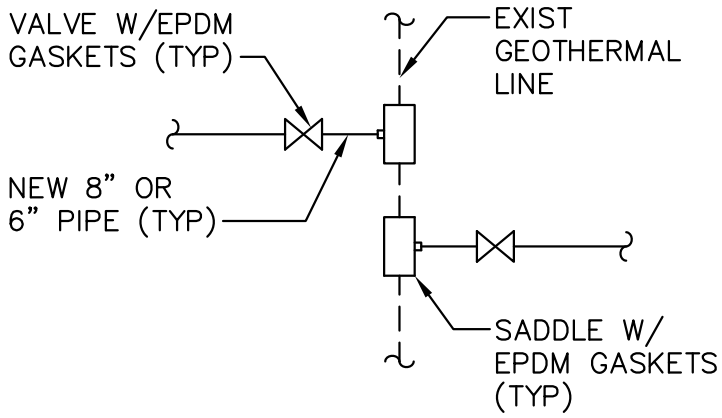

NOTE:
SADDLES CAN BE SUBSTITUTED W/ TEES THAT ARE MEGA–LUGGED.

INTERSECTION EXTENSIONS

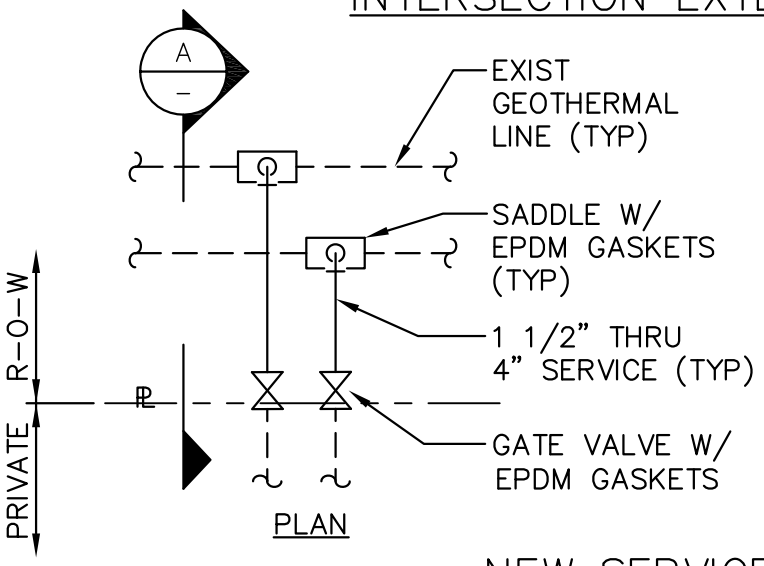

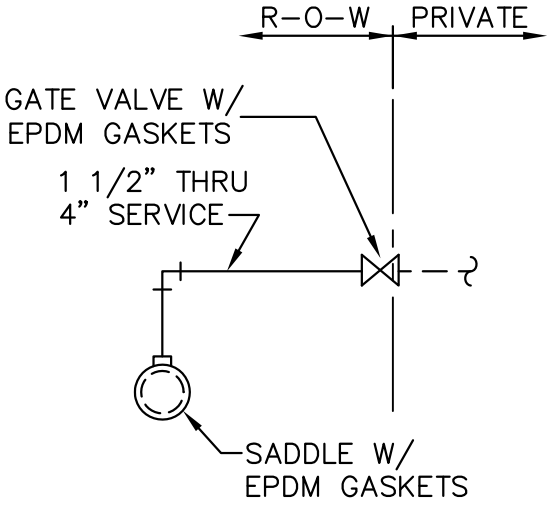

SECTION A–A

NEW SERVICES

CITY OF KLAMATH FALLS

	Date	Revision:
2	3/10	5th EDITION
1	6/04	2nd EDITION

GEOTHERMAL EXTENSIONS AND SERVICE CONNECTIONS

Approved By: *Don Wilcox*

Drwn. By: WEM
Date: 3/04
Drwg. No.: **6-105**